AITALMAC

Heng Sheng Road , Gao Chun Economic Development Zone ,
NANJING,211300 P.R.CHINA

CLIENTE

AITALMAC CO.,LTD

MACHINE	MAIN POWER SUPPLY
CNC	VOLT. 380
KT38	FREQ. 50/60
WIRING DIAGRAM	**CUBICLE DIMENSION**
KT38-231201	L (mm) 1862
	H (mm) 922
	P (mm) 456

LOCATION SYMBOLS

- Components on the door
- Components inside the cubicle (usually omitted)
- Machine components (usually omitted)

COMPONENTS DESIGNATION

C	Condensers
D	CNC control model
E	Component not in this list
F	Protection Devices
FU	Fuses
G	Generators, feeders
H	Signalling devices
KA	Relays
KM	Contactors
L	Drives
M	Motors
N	Analog integrated circuits
P	Switching power supply
Q	Circuit breaker
QS	Highly versatile change over switch
R	Resistors
SQ	Sensor，Limit
S	Filter
SB	Buttons
T	Transformers
U	Modulators converters
V	Rectifiers, semiconductors
EV	Solenoid valves
X	Terminal wire clamps, connectors
Y	Electricity actuating devices

CONDUCTORS DESIGNATION

COLOR	FUNCTION	MINIMUM SECTION
BLACK	power circuit A.C./D.C.	1,5mm²
RED	A.C. auxiliary circuit	1,0mm²
BLUE	D.C. auxiliary circuit	1,0mm²
YELLOW GREEN	protection earth	1,5mm²
SCREEN CABLE	reference - signal	0.5 mm²
RED +/BLUE -	thermocouples	COMPENSATED CABLE
	PLC circuit	0,35mm² (0,5mm² I<2A)

COLORS

WH White	GY Gray
YE Yellow	BU Blue
RD Red	BK Black
OG Orange	GNYE GreenYellow
GN Green	

MAIN CIRCUIT BREAKER OPERATING TIME:_____
SYMMETRICAL SHORT-CIRCUIT CURRENT:_____

WARNING: THE PROTECTION OF THE MAIN POWER SUPPLY AND THE CONNECTION TO THE EARTH'S SYSTEM ARE DEPENDANT ON THE CUSTOMER.
IN RESPECT TO THE EUROPEAN STANDARD EN60439-1 SPECIFICATIONS - CEI 17-13.1 DOSSIER 1433 - AND DPR 547 DD 27/04/1955,
THE MAIN POWER SUPPLY MUST BE PROTECTED WITH A PROPER MAGNETIC-THERMAL SWITCH HAVING BREAKING CAPACITY NOT LOWER THAN 10 KILOAMPERE.

THE WIRING DIAGRAM IS INDICATED WITHOUT TENSION, AIR, OIL AND WATER FLOW.

AitalMac
www.aitalmac.com

Designed By :	Checked By :	Trimness By :	Description :
ZLJ			MACHINE INFORMATION

Machine :	Date:	Revision:	Approved By :	Pag.	Next.
KT38	12.30.2023	KT38-231201		1	2

COMPONENT REFERENCE

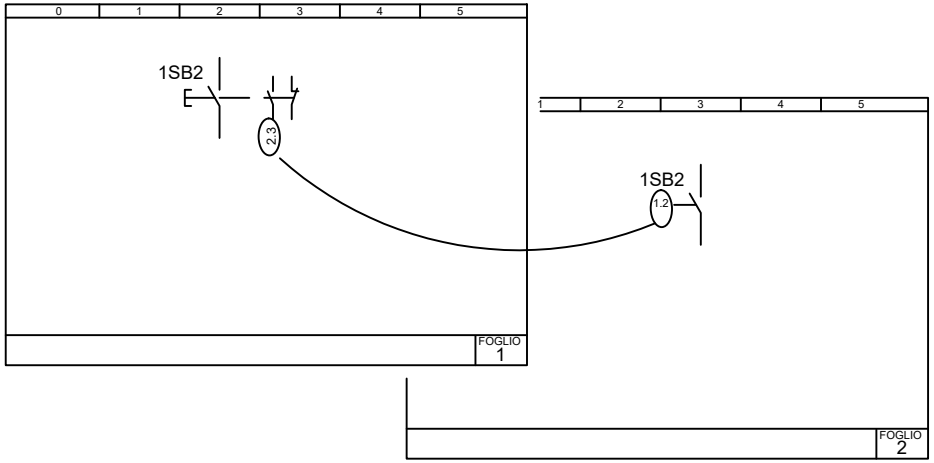

COMPONENT NAME/COIL-CONTACT POSITION

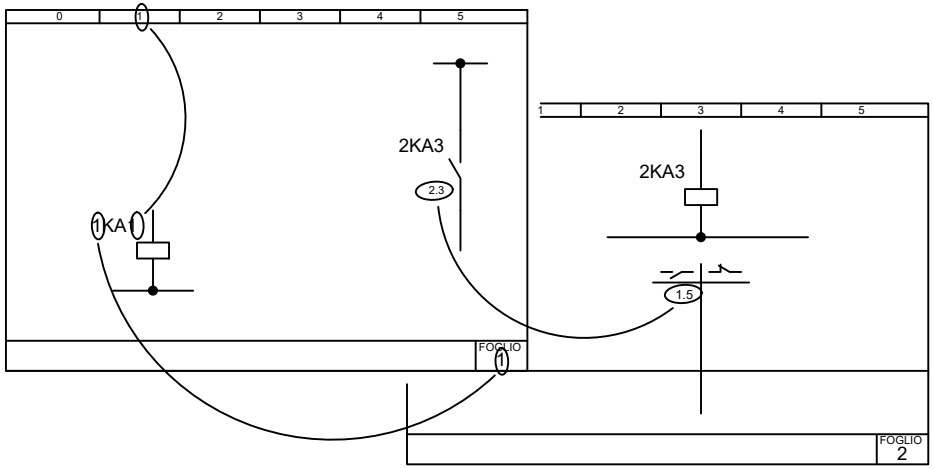

SIGNALS

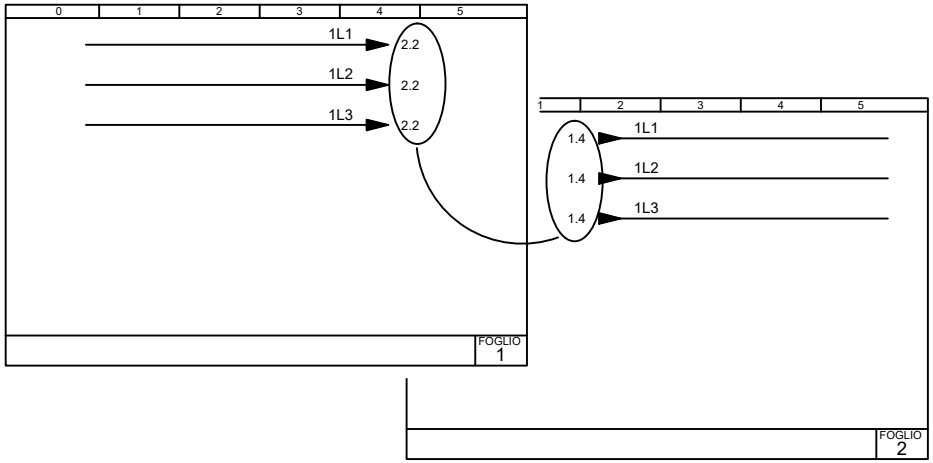

WIRE NUMBER

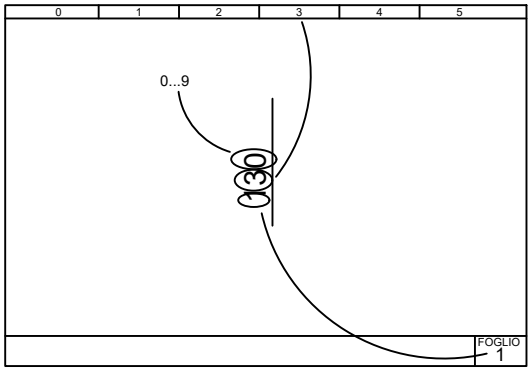

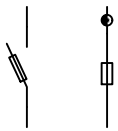

6x30 fuse terminal

AitalMac www.aitalmac.com	Designed By : ZLJ	Checked By :	Trimness By :	Description : EXAMPLE INFORMATION		
	Machine : KT38	Date: 12.30.2023	Revision: KT38-231201	Approved By :	Pag. 2	Next. 3

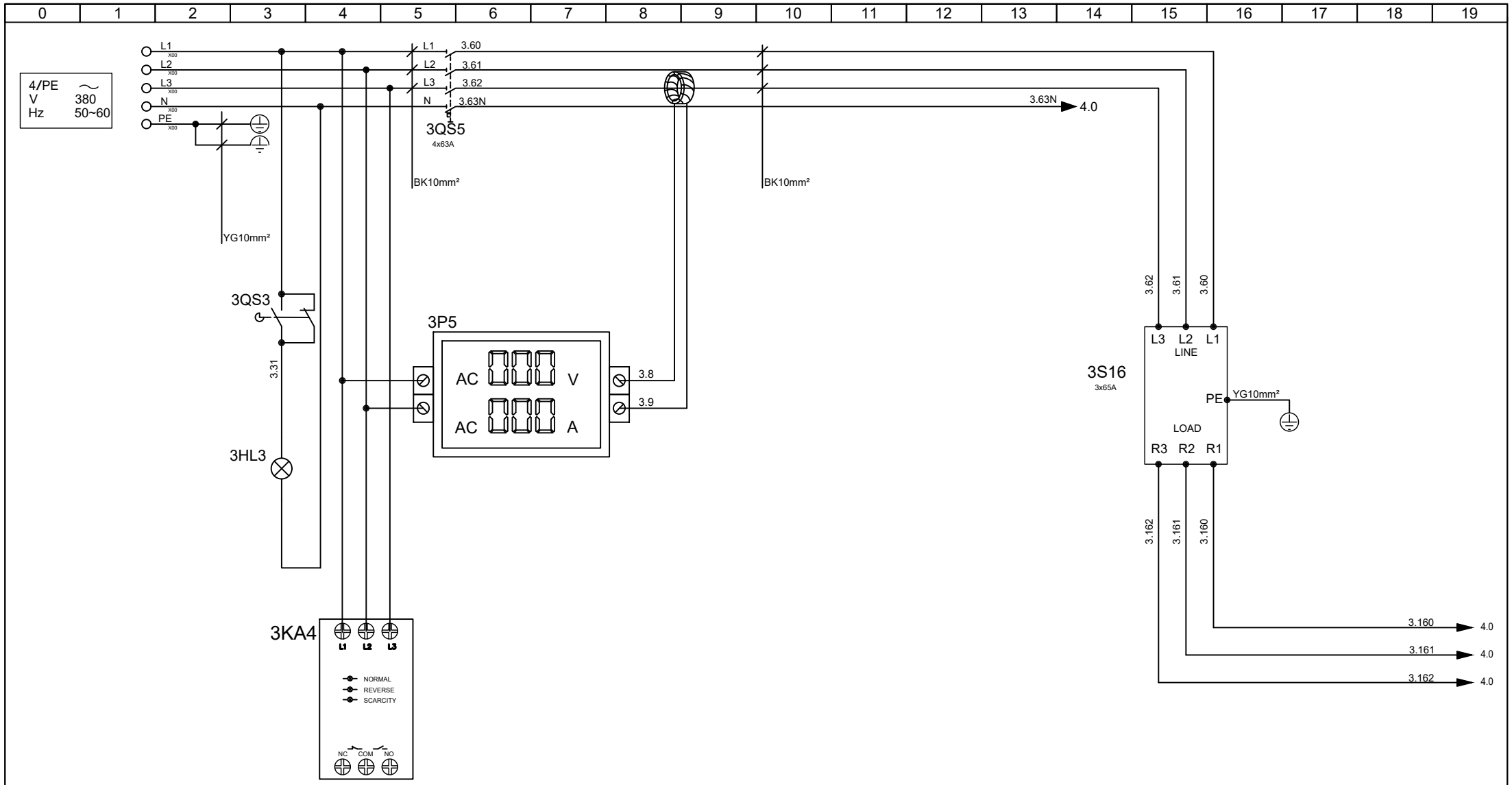

OPEN DOOR LIGHT ON | PHASE PROTECTION RELAY | GENERAL SWITCH | VOLT & AMPERE DISPLAY | FILTER

AitalMac www.aitalmac.com	Designed By : ZLJ	Checked By :	Trimness By :	Description : POWER LINE			
	Machine : KT38	Date: 12.30.2023	Revision: KT38-231201	Approved By :	Pag. 3	Next. 4	

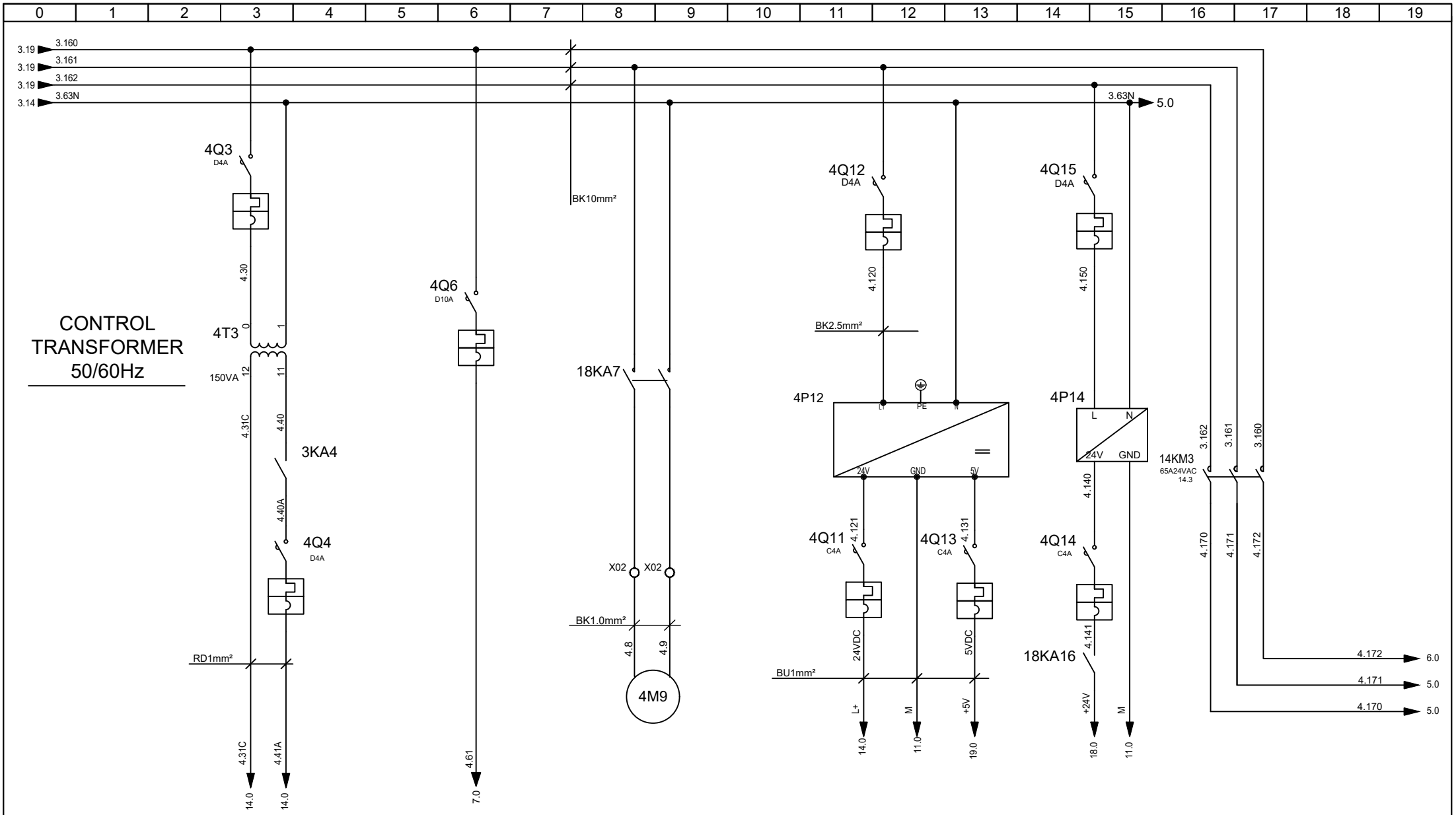

AUXILIARY CIRCUIT POWER SUPPLY

CNC POWER

GREASE PUMP MOTOR

POWER SUPPLY 24VDC4A 5VDC6A

GENERAL CONTACTOR

AitalMac www.aitalmac.com	Designed By : ZLJ	Checked By :	Trimness By :	Description : POWER LINE AUXILIARY CIRCUIT			
	Machine : KT38	Date: 12.30.2023	Revision: KT38-231201	Approved By :		Pag. 4	Next. 5

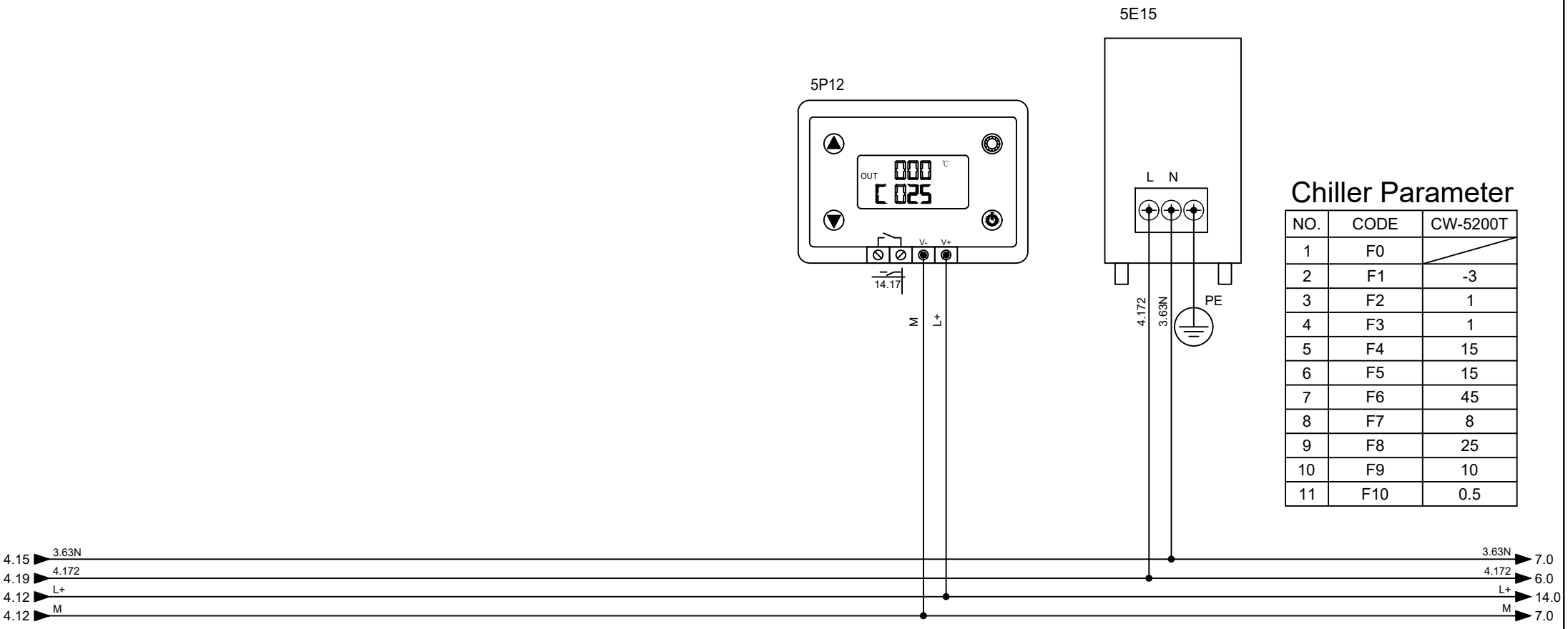

Chiller Parameter

NO.	CODE	CW-5200T
1	F0	
2	F1	-3
3	F2	1
4	F3	1
5	F4	15
6	F5	15
7	F6	45
8	F7	8
9	F8	25
10	F9	10
11	F10	0.5

AitalMac www.aitalmac.com	Designed By : ZLJ	Checked By :	Trimness By :	Description : INDUSTRIAL CHILLER			
	Machine : KT38	Date: 12.30.2023	Revision: KT38-231201	Approved By :		Pag. 5	Next. 6

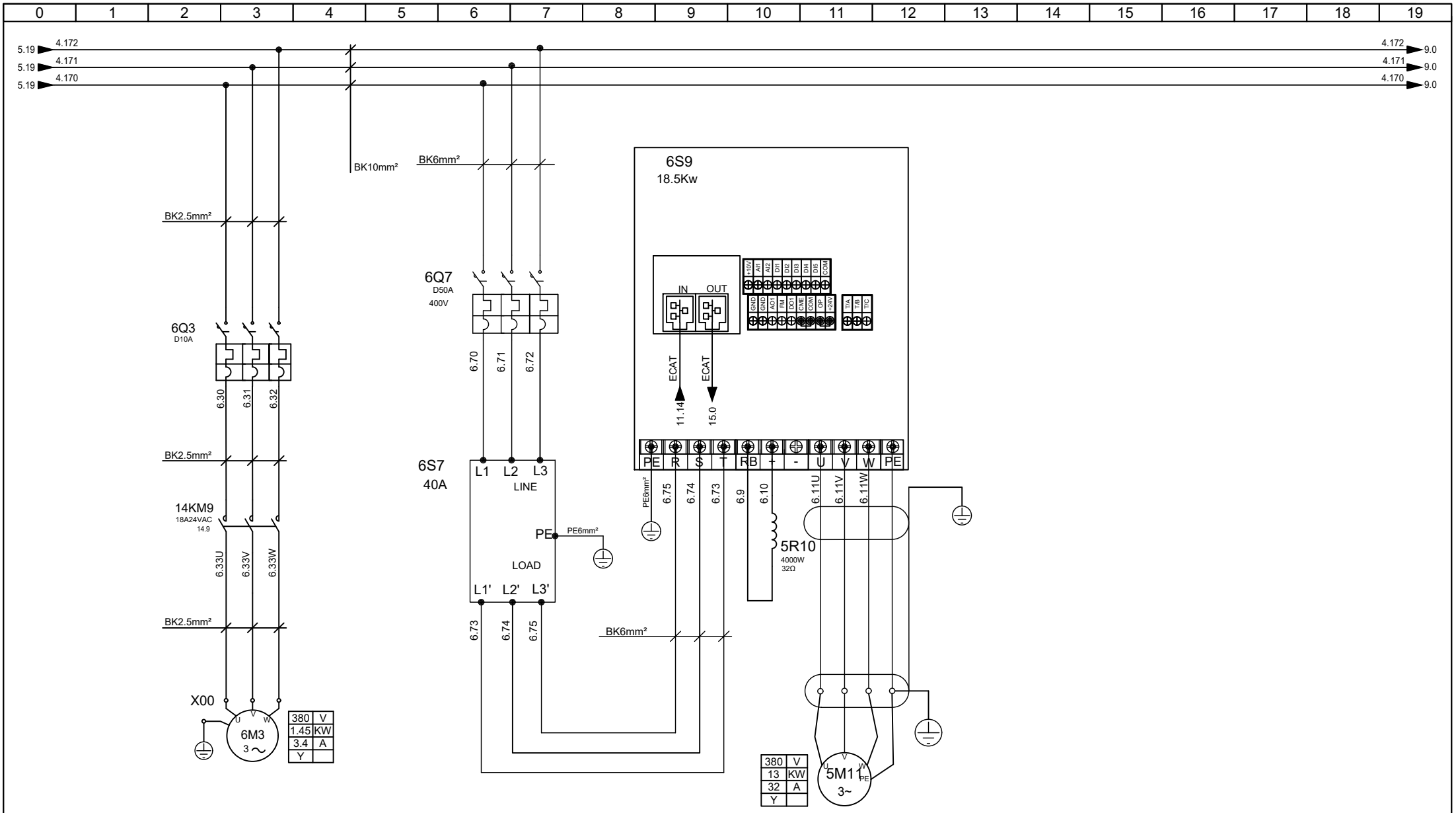

VACUUM PUMP MOTOR

INVERTER FILTER

BRAKING RESISTOR

SPINDLE MOTOR

AitalMac www.aitalmac.com	Designed By : ZLJ	Checked By :	Trimness By :	Description : ECAT NO.5 INVERTER	
	Machine : KT38	Date: 12.30.2023	Revision: KT38-231201	Approved By :	Pag. 6 / Next. 7

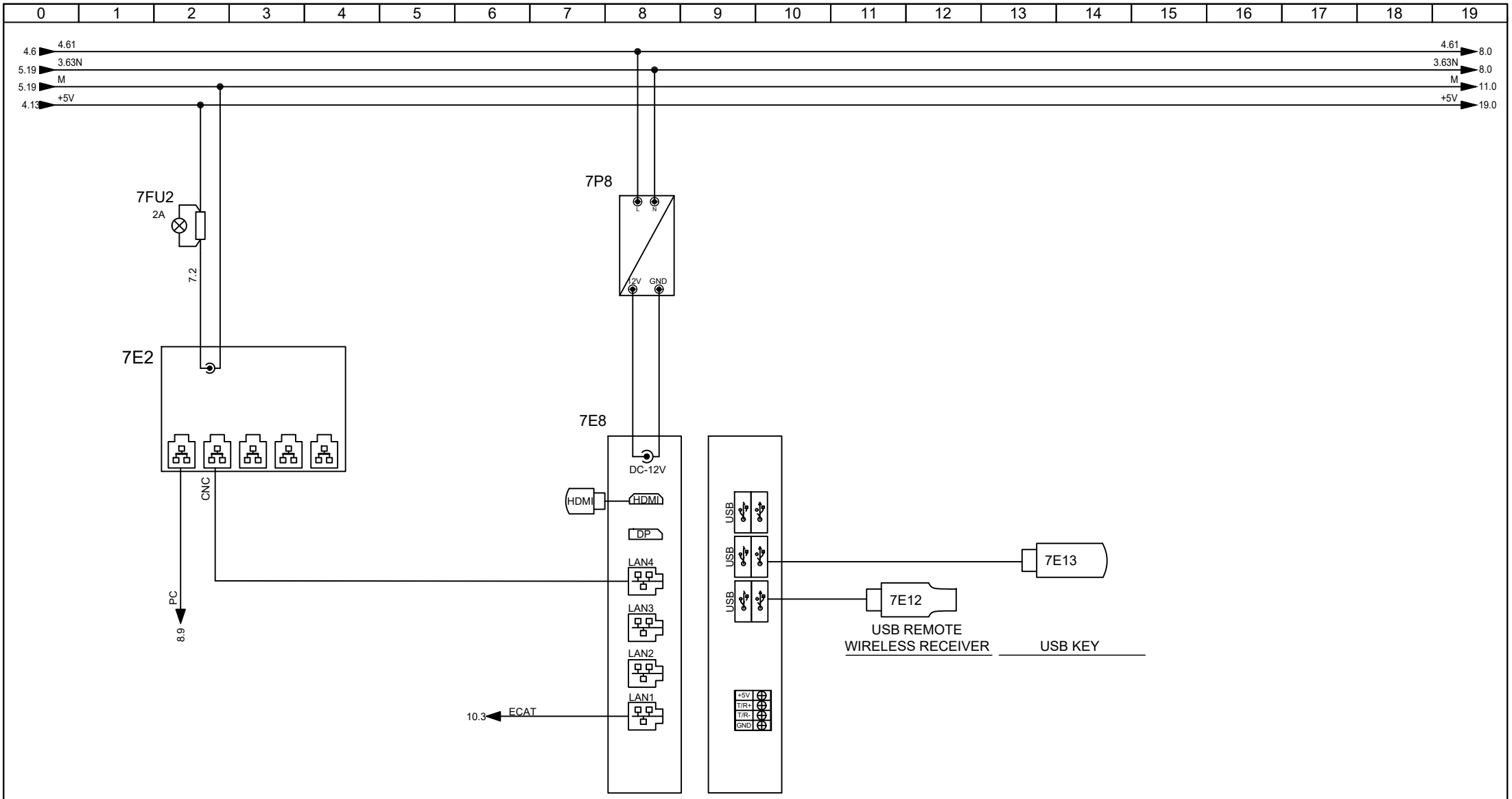

CNC CONTROLLER
ONLINE MONITORING SYSTEM

AitalMac www.aitalmac.com	Designed By : ZLJ	Checked By :	Trimness By :	Description : CNC CONTROL			
	Machine : KT38	Date: 12.30.2023	Revision: KT38-231201	Approved By :		Pag. 7	Next. 8

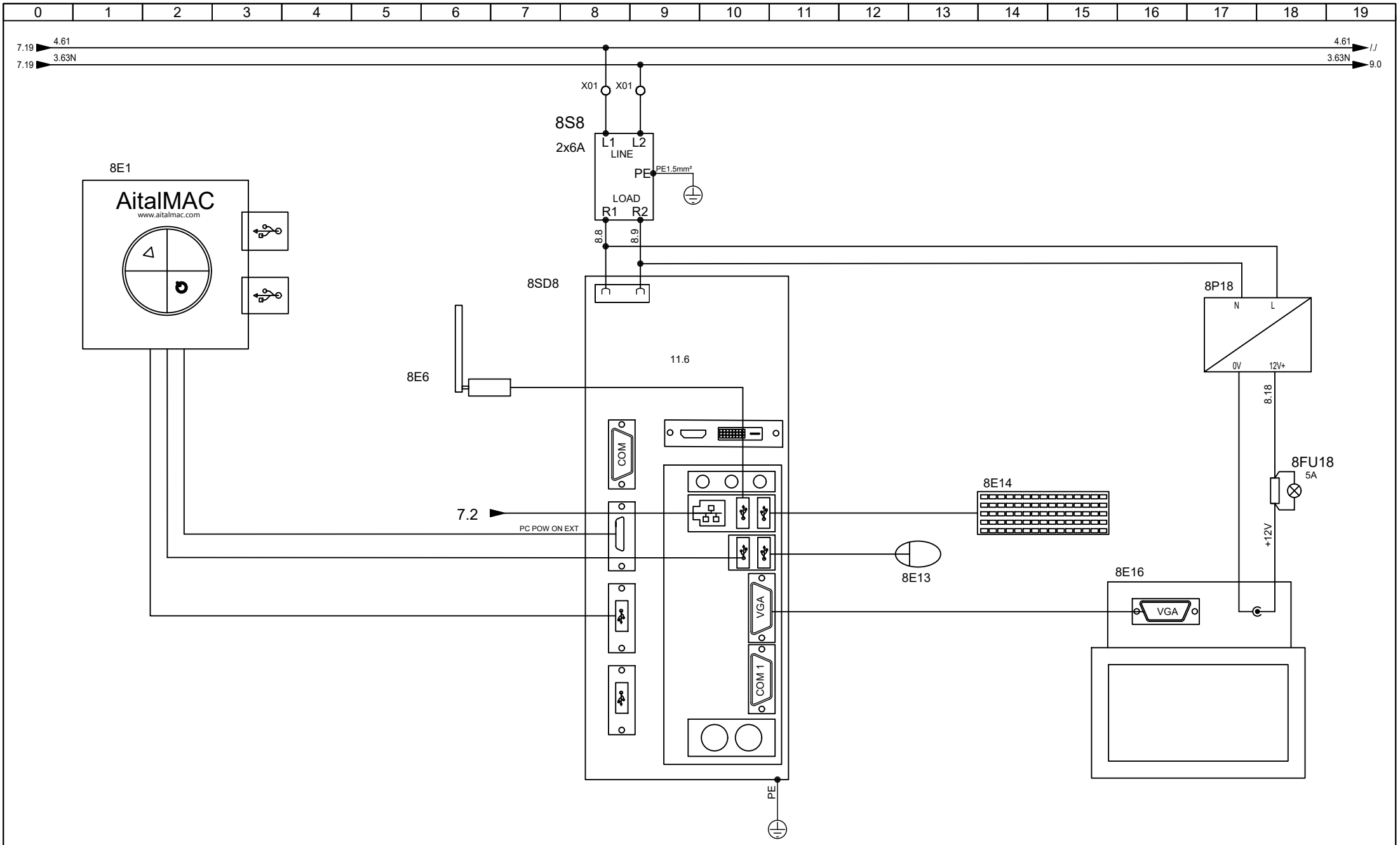

COMPUTER POWER ON/OFF BUTTON

USB WIFI

WINDOWS PC

MOUSE&KEYBOARD

MONITOR&MONITOR POWER SUPPLY

AitalMac www.aitalmac.com	Designed By : ZLJ	Checked By :	Trimness By :	Description : PC CONTROL			
	Machine : KT38	Date: 12.30.2023	Revision: KT38-231201	Approved By :		Pag. 8	Next. 9

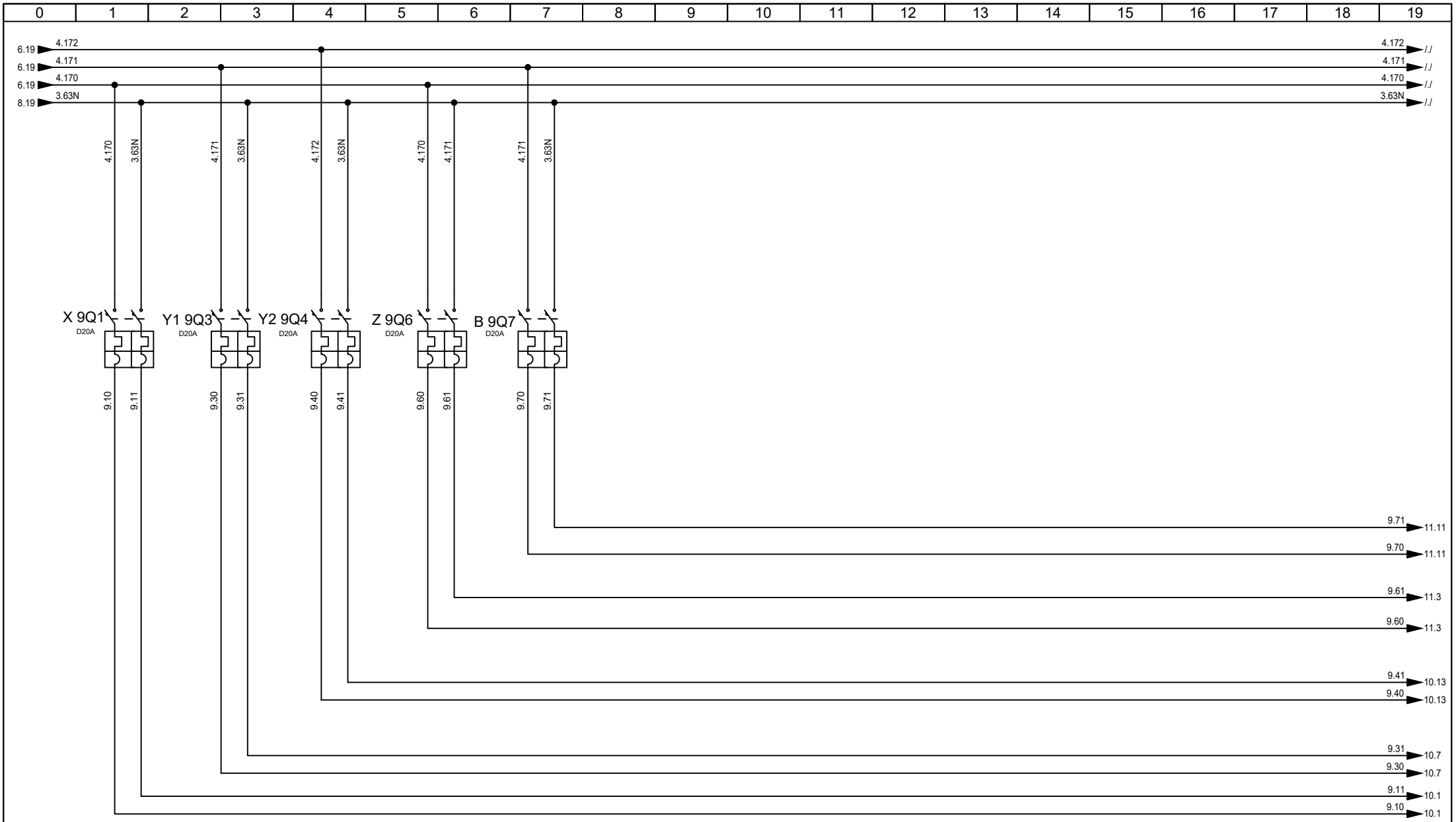

AitalMac www.aitalmac.com	Designed By : ZLJ	Checked By :	Trimness By :	Description :			
	Machine : KT38	Date: 12.30.2023	Revision: KT38-231201	Approved By :		Pag. 9	Next. 10

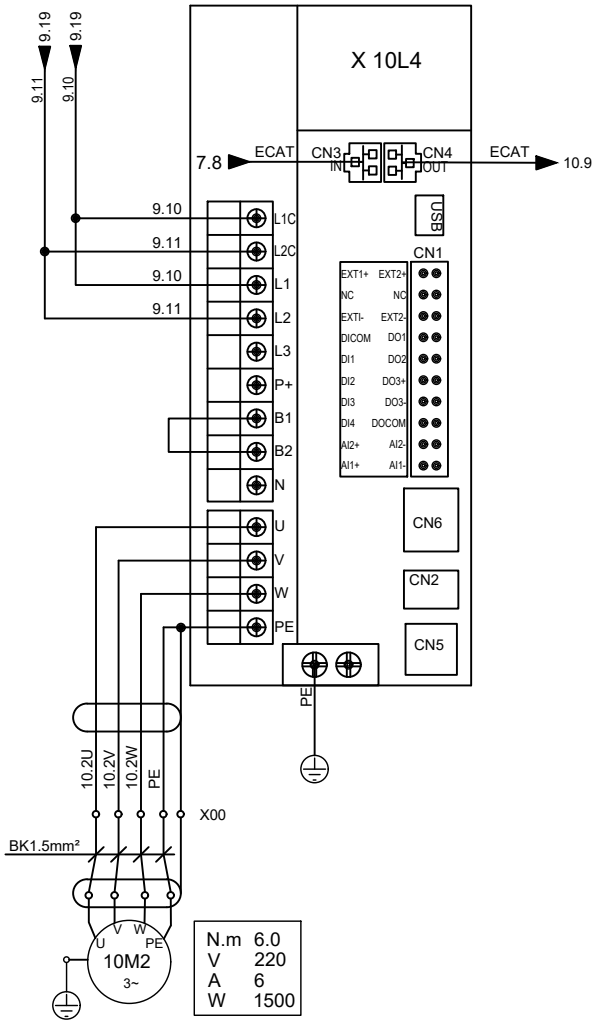

X MOTR

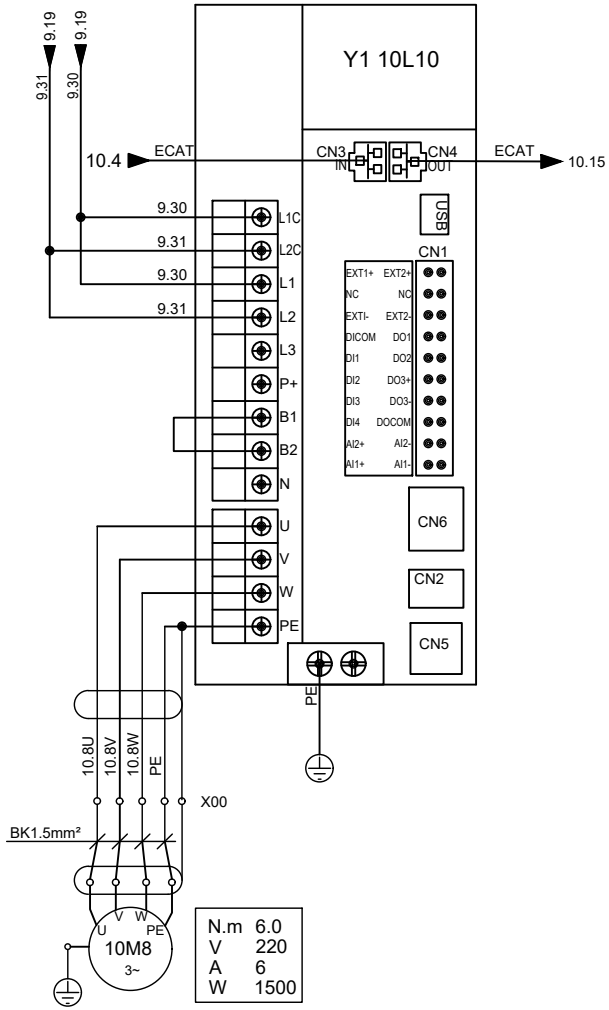

Y1 MOTOR

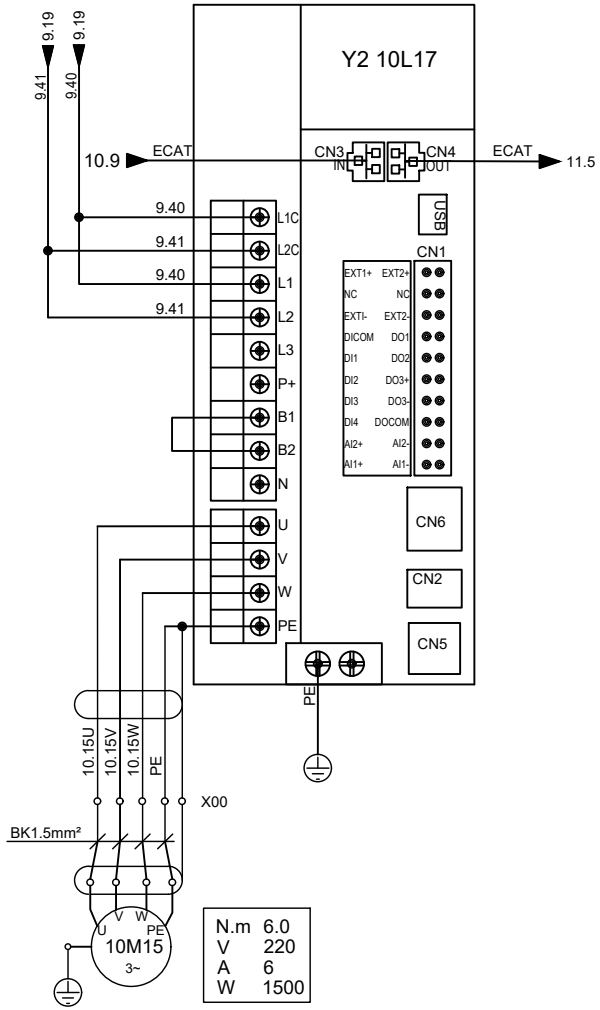

Y2 MOTOR

AitalMac www.aitalmac.com	Designed By : ZLJ	Checked By :	Trimness By :	Description : ECAT NO.0-2 DRIVERS
	Machine : KT38	Date: 12.30.2023	Revision: KT38-231201	Approved By :

Pag. 10 | Next. 11

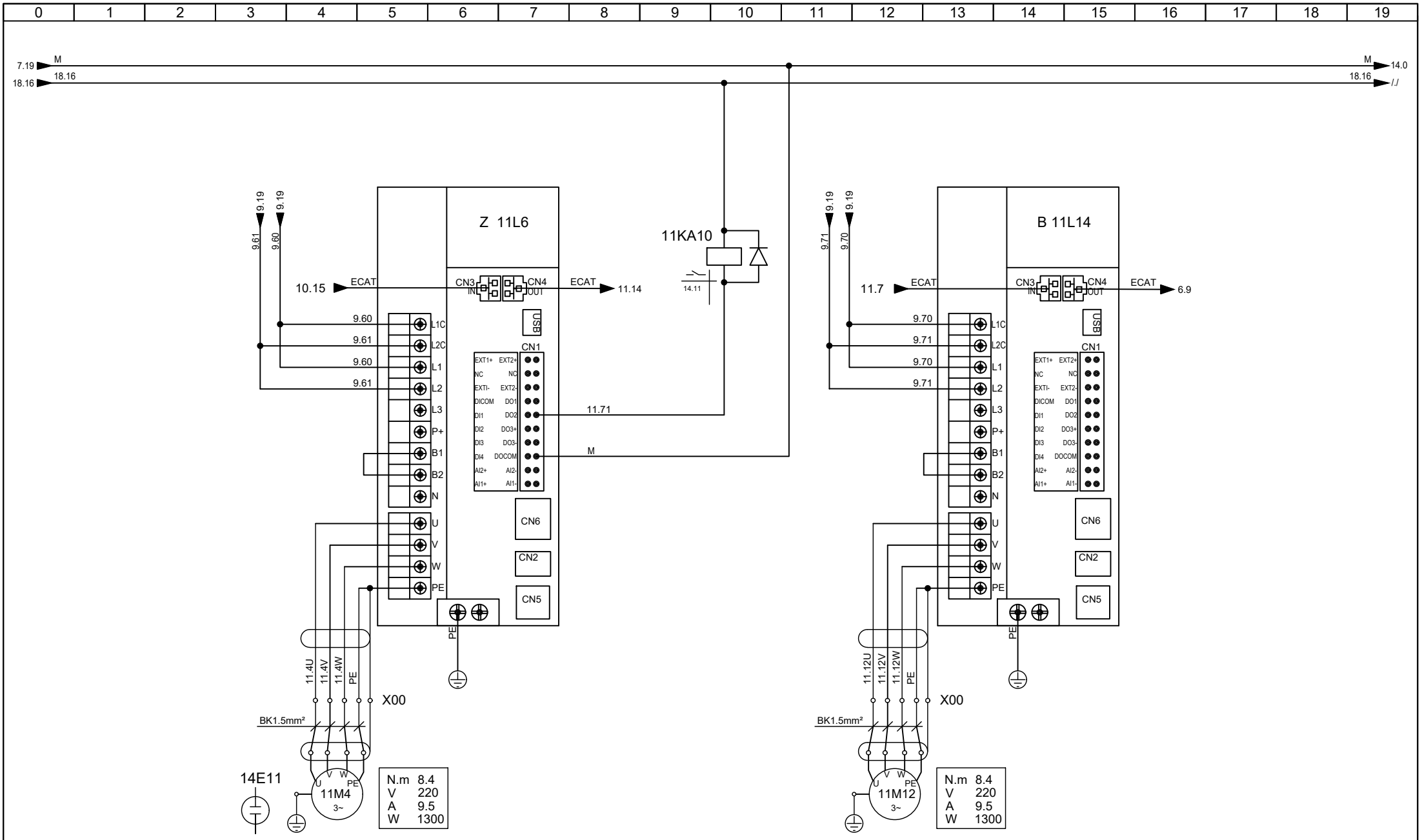

AitalMac www.aitalmac.com	Designed By : ZLJ	Checked By :	Trimness By :	Description : ECAT NO.3-4 DRIVERS	
	Machine : KT38	Date: 12.30.2023	Revision: KT38-231201	Approved By :	Pag. 11 / Next. 12

0	1	2	3	4	5	6	7	8	9	10	11	12	13	14	15	16	17	18	19

0	1	2	3	4	5	6	7	8	9	10	11	12	13	14	15	16	17	18	19

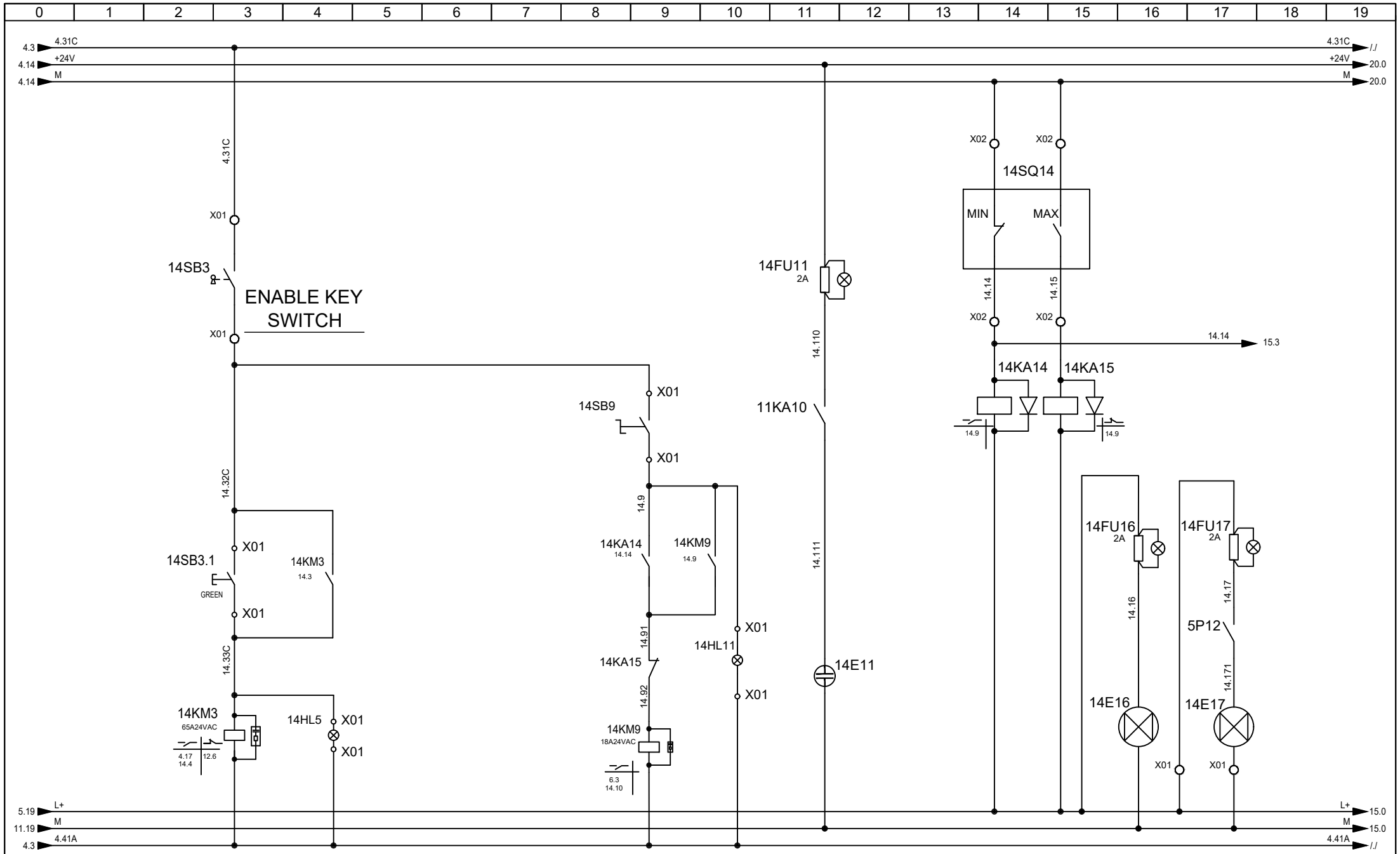

AitalMac www.aitalmac.com	Designed By : ZLJ	Checked By :	Trimness By :	Description :		
	Machine : KT38	Date: 12.30.2023	Revision: KT38-231201	Approved By :	Pag. 14	Next. 15

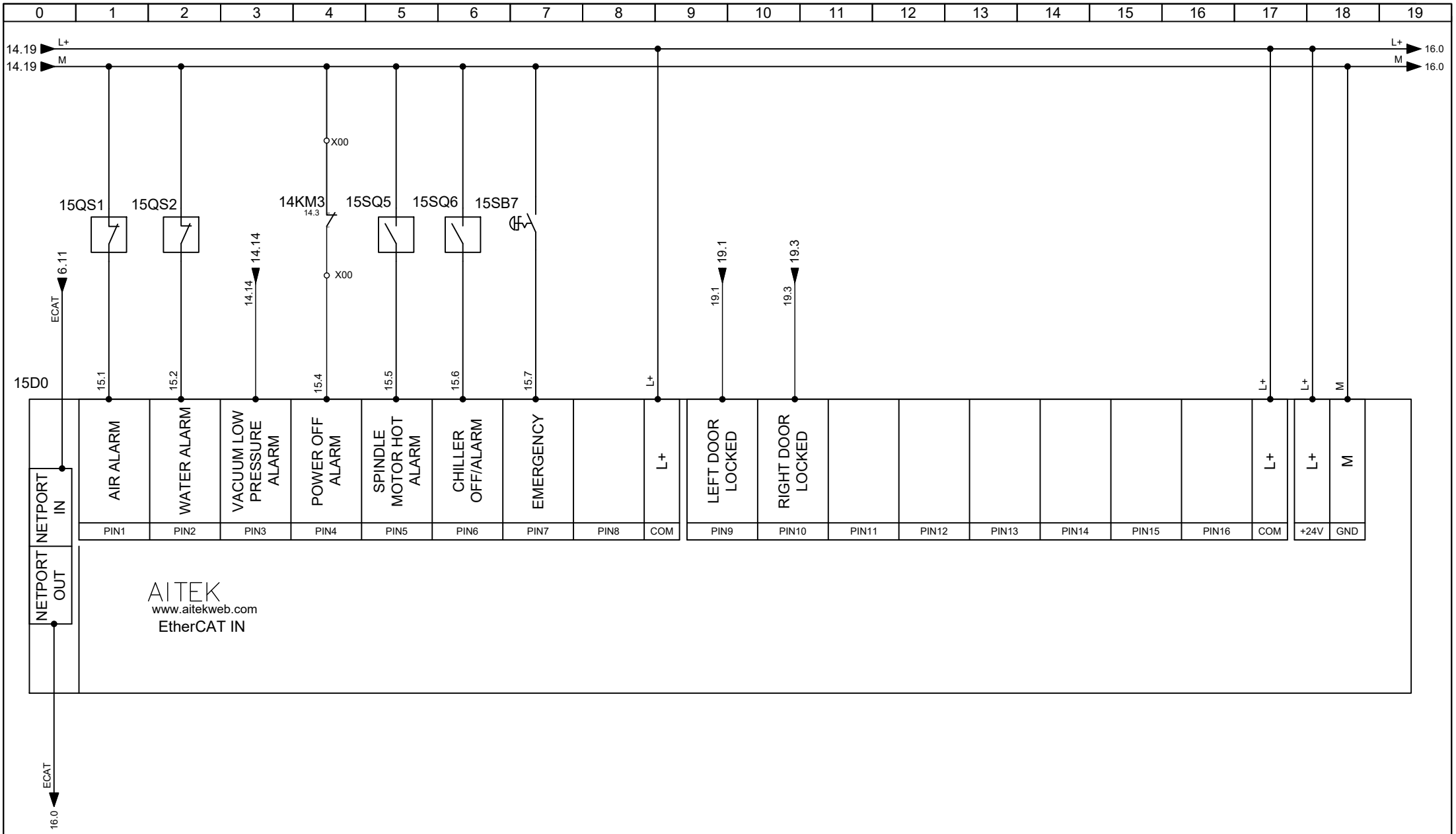

AitalMac www.aitalmac.com	Designed By : ZLJ	Checked By :	Trimness By :	Description : ECAT NO.6 I/O			
	Machine : KT38	Date: 12.30.2023	Revision: KT38-231201	Approved By :		Pag. 15	Next. 16

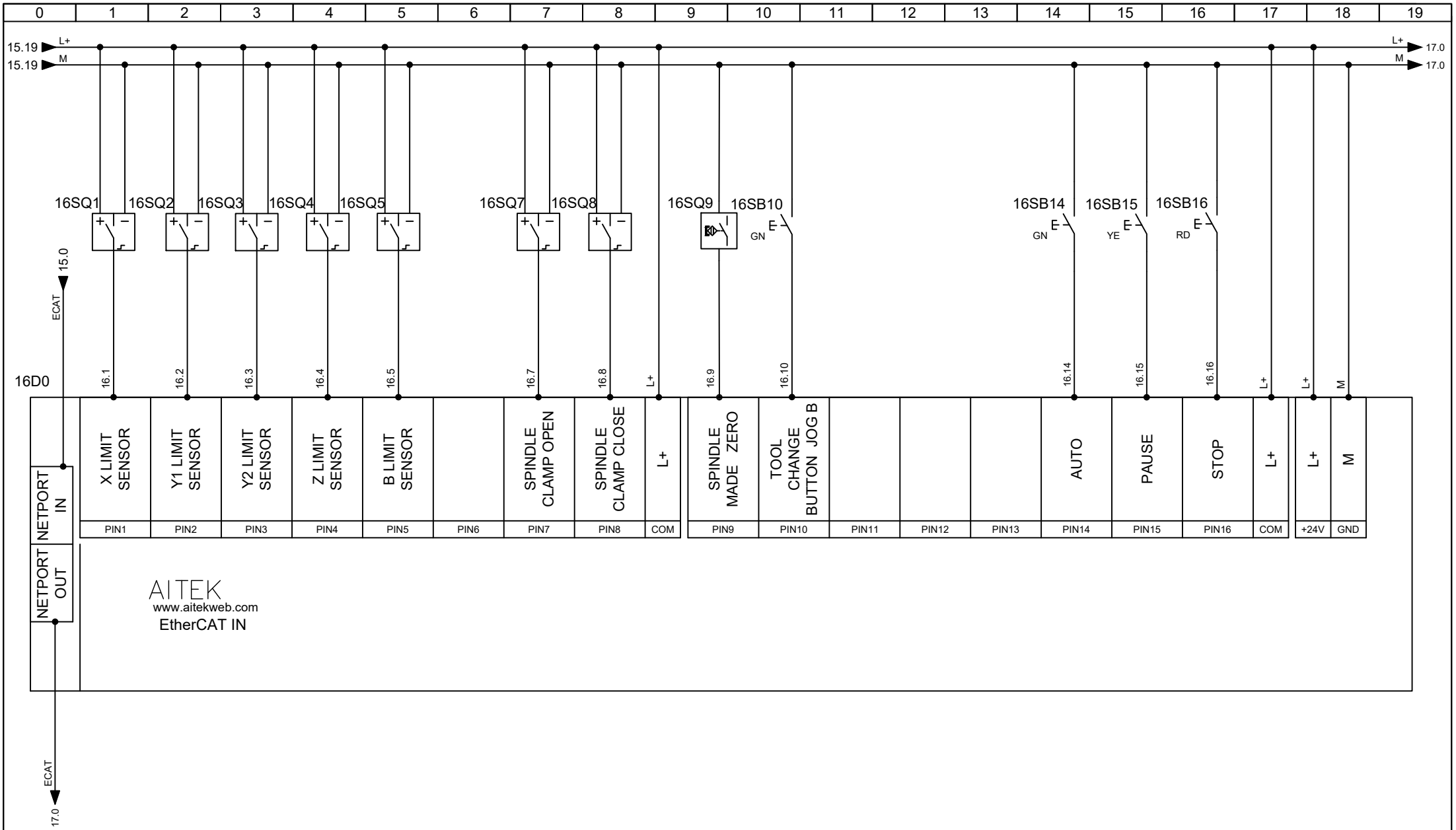

AitalMac www.aitalmac.com	Designed By : ZLJ	Checked By :	Trimness By :	Description : ECAT NO.7 I/O		
	Machine : KT38	Date: 12.30.2023	Revision: KT38-231201	Approved By :	Pag. 16	Next. 17

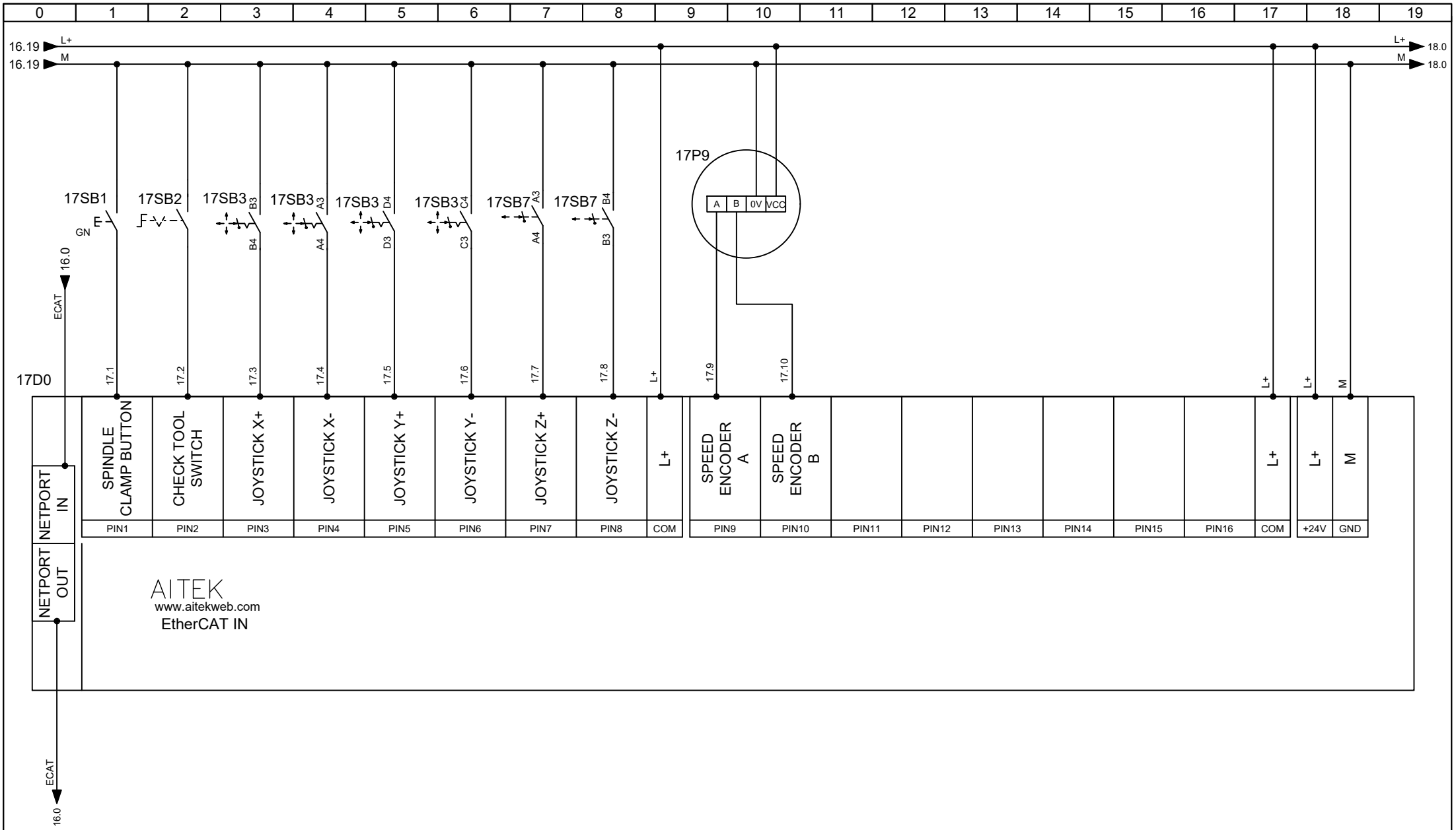

AitalMac www.aitalmac.com	Designed By : ZLJ	Checked By :	Trimness By :	Description : ECAT NO.8 I/O		
	Machine : KT38	Date: 12.30.2023	Revision: KT38-231201	Approved By :	Pag. 17	Next. 18

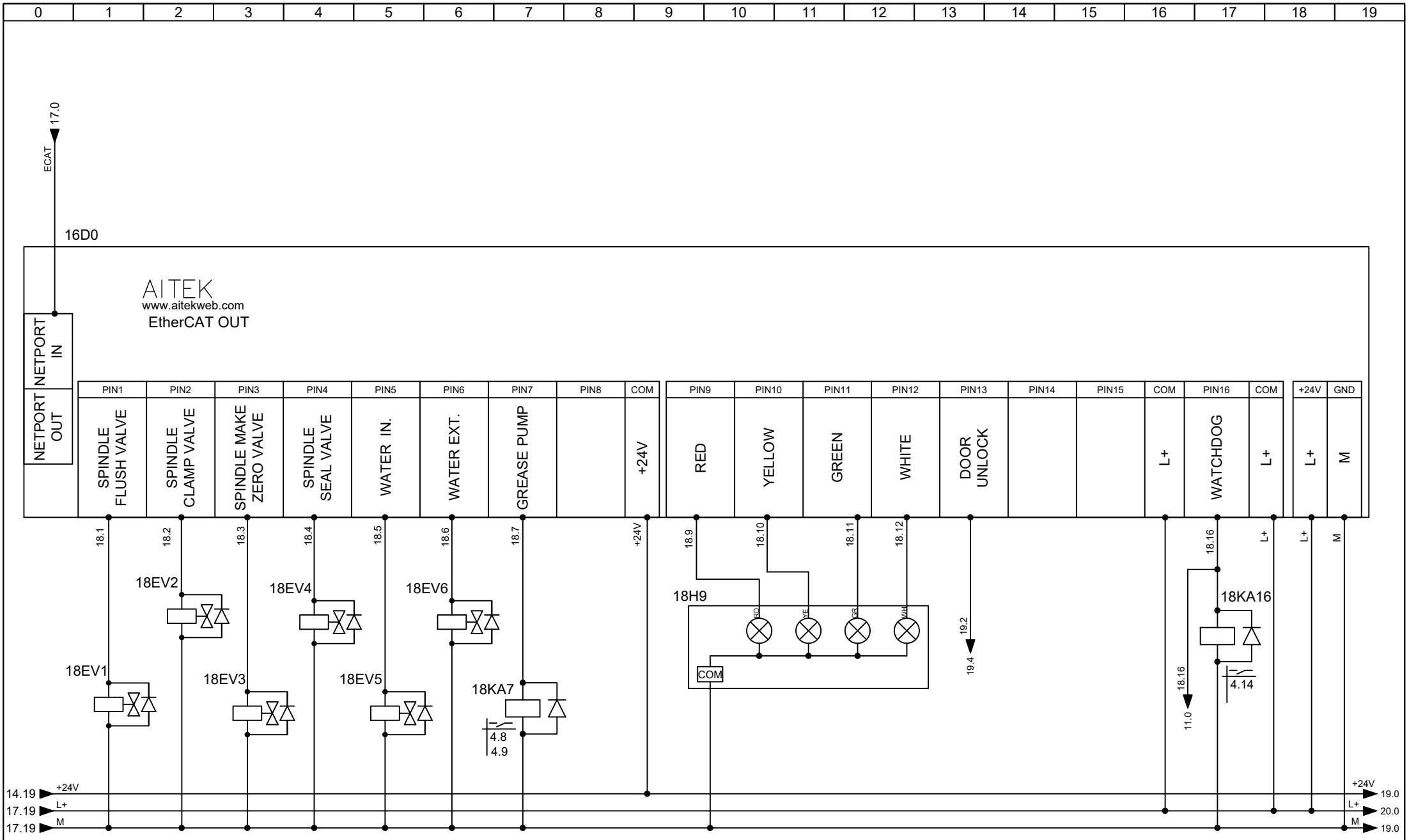

ALARM LAMP

AitalMac www.aitalmac.com	Designed By : ZLJ	Checked By :	Trimness By :	Description : ECAT NO.9 I/O	
	Machine : KT38	Date: 12.30.2023	Revision: KT38-231201	Approved By :	Pag. 18 / Next. 19

LEFT DOOR SAFETY

RIGHT DOOR SAFETY

LASER

AitalMac www.aitalmac.com	Designed By : ZLJ	Checked By :	Trimness By :	Description :		
	Machine : KT38	Date: 12.30.2023	Revision: KT38-231201	Approved By :	Pag. 19	Next. 20

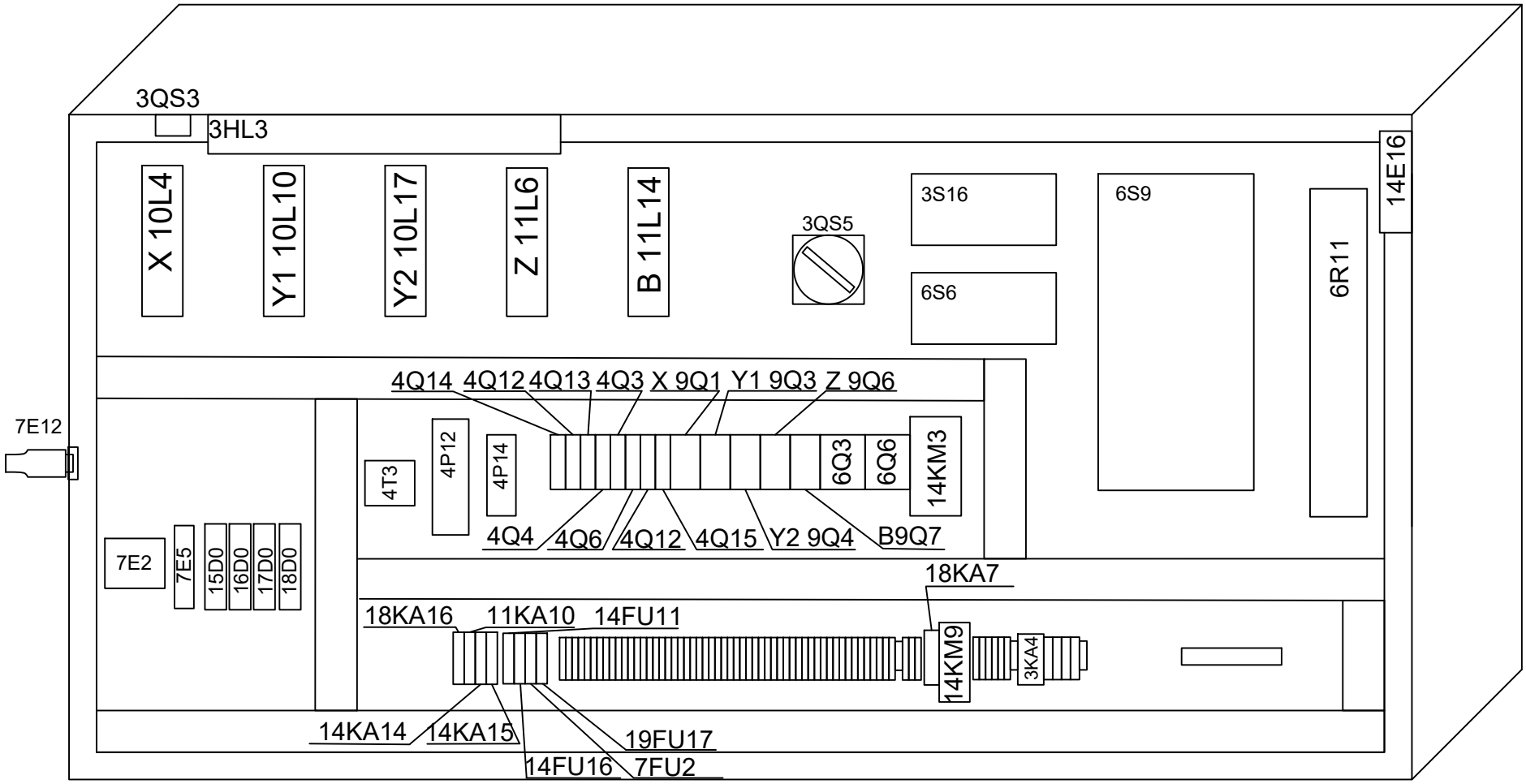

X00

AitalMac www.aitalmac.com	Designed By : ZLJ	Checked By :	Trimness By :	Description :		
	Machine : KT38	Date: 12.30.2023	Revision: KT38-231201	Approved By :	Pag. 20	Next. 21

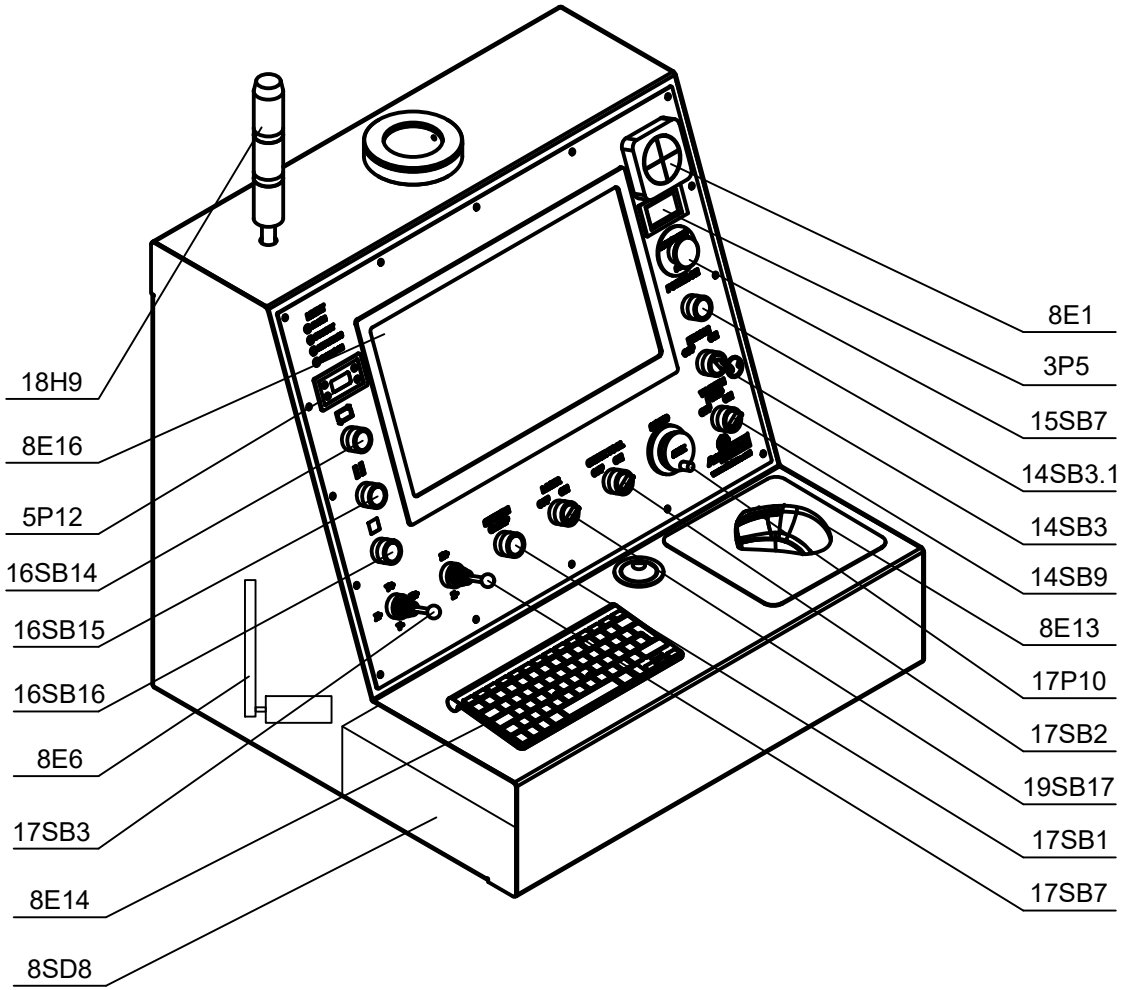

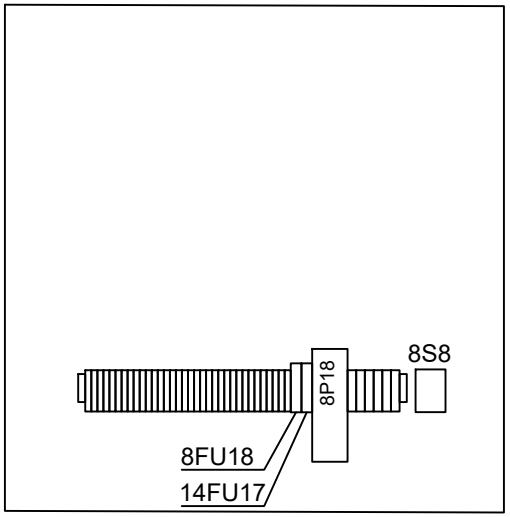

X01

AitalMac www.aitalmac.com	Designed By : ZLJ	Checked By :	Trimness By :	Description :			
	Machine : KT38	Date: 12.30.2023	Revision: KT38-231201	Approved By :		Pag. 21	Next. 22

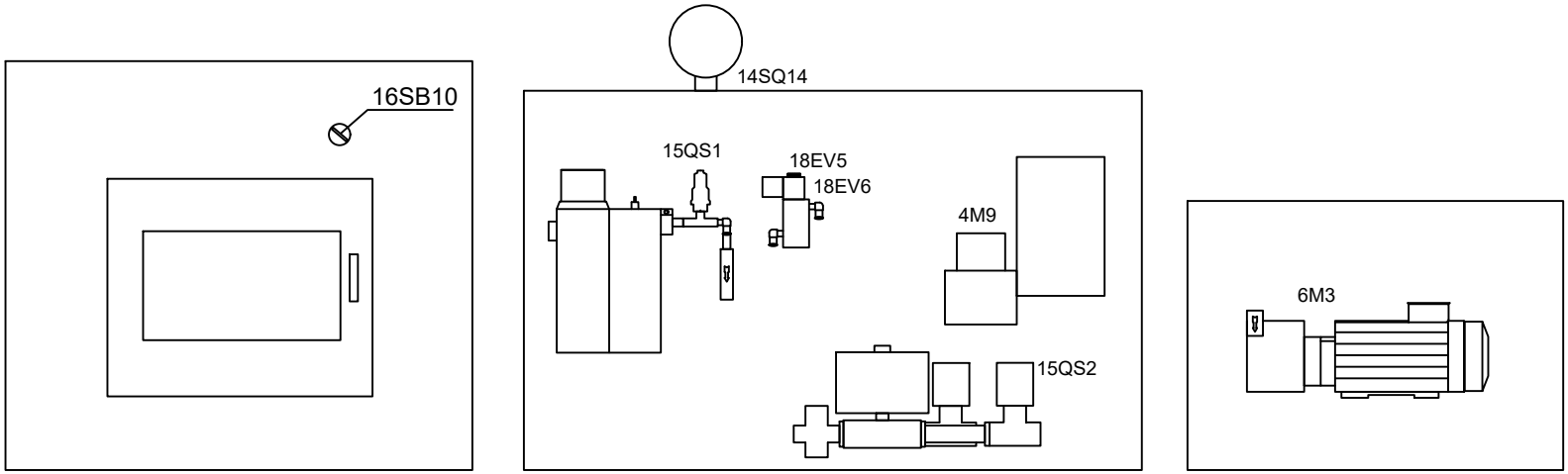

X02

AitalMac www.aitalmac.com	Designed By : ZLJ	Checked By :	Trimness By :	Description :			
	Machine : KT38	Date: 12.30.2023	Revision: KT38-231201	Approved By :		Pag. 22	Next. 23

Motor Self-Study

F1-37=2

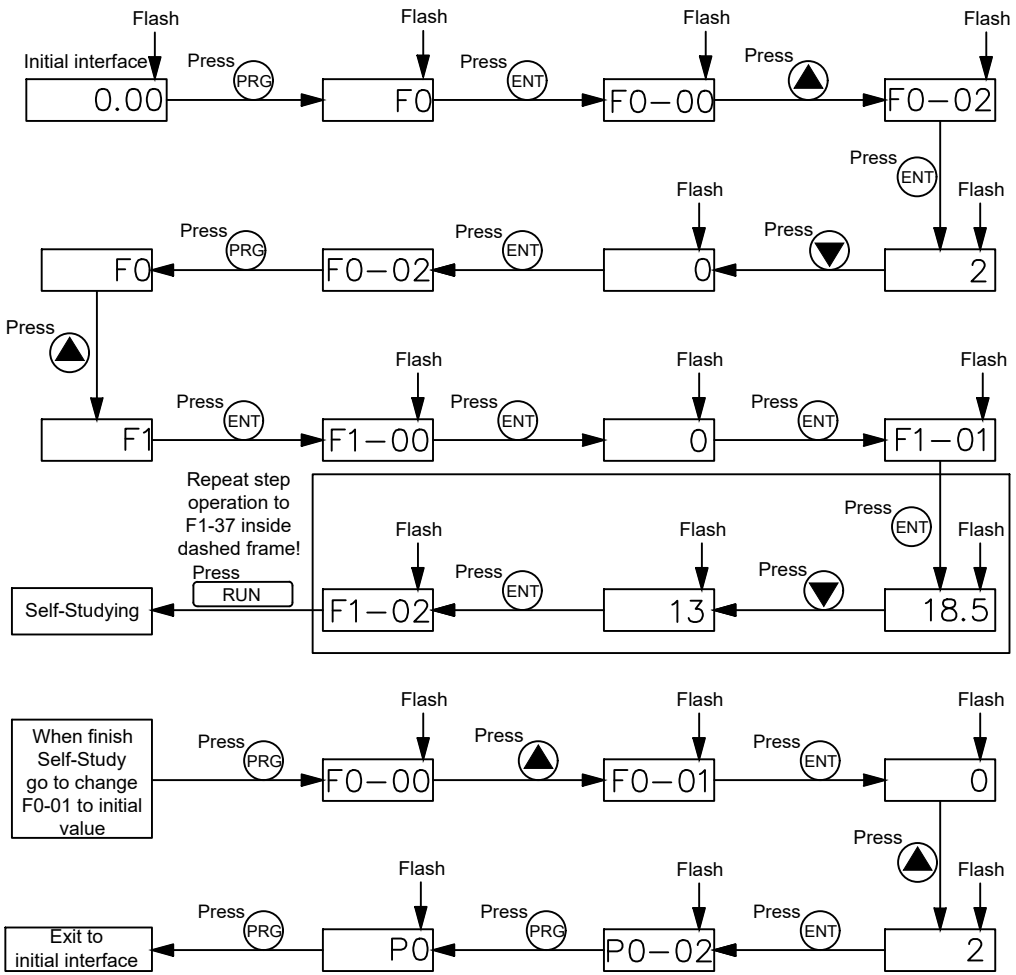

Monitoring Function

U0−00 Output Frequency
U0−01 Input Frequency
U0−06 Output Torque
U0−14 Motor Speed

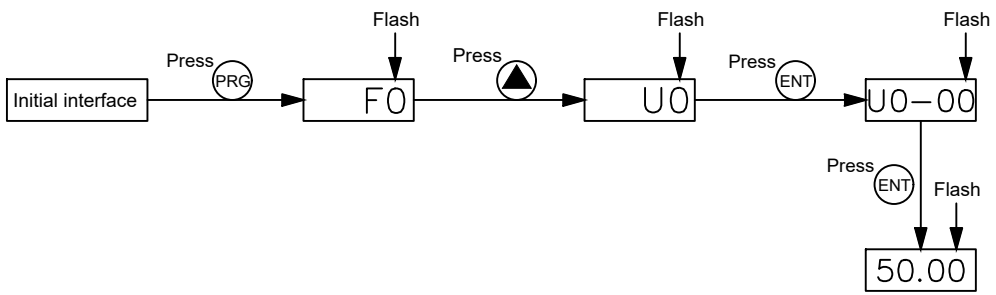

Inverter Parameter

NAME	RANGE	DEFAULT	UNITS
F0-01	0,1,2	2	
F0-02	0,1,2	2	
F0-03	0-9	9	
F0-04	0-9	0	
F0-10	50.00Hz~500.00Hz	500	Hz
F0-12	0.00Hz~F0-10(MAX)	500	Hz
F0-17	0.0s~6500.0s	5	S
F0-18	0.0s~6500.0s	10	S
F0-28	0,1	1	
F1-00	0,1	0	
F1-01	0.1kW-1000.0kW	13	KW
F1-02	1V-2000V	380	V
F1-03	0.01A-655.35A	32	A
F1-04	0.01Hz-MAX	60	Hz
F1-05	1RPM-65535RPM	1710	Rpm
F3-01	0.0%,0.5%-30%	2	%
F3-02	0.00-MAX	5	Hz
F7-03	0000-FFFF	4051	
F7-04	0000-FFFF	0000	

Servo Driver Parameter

NAME	RANGE	X	Y1	Y2	Z	B
PA003		13	13	13	13	11
PA004		750	750	750	750	1550
PA015	0-9	1	1	1	1	1
PA222		0	0	0	0	1000

Pg.	Code	Name	Mfrs.	Model
3	3QS3	Travel Switch	SNJDQ	LX19-001
3	3HL3	OPEN DOOR LIGHT ON	--	T5 12W/220V
3	3QS5	General Switch	GLELE	GLD11-100/08 +4P
3	3P5	Volt-ammeter	OUXIN	200-450V~0-100A
3	3S16	Filter	DOTHINK	DTT2121-65-S16-S77
3	3KA4	PHASE PROTECTION RELAY	SHNTOER	TG30s
4	4T3	Transformers	CHNT	NDK(BK)-150
4	4Q3	Circuit Breaker	Schneider	IC65N D4A 1P
4	4Q4	Circuit Breaker	Schneider	IC65N D4A 1P
4	4Q6	Circuit Breaker	Schneider	IC65N D4A 1P
4	4M9	Grease Pump Motor	ML	MYK-202-200-0 15W/220V 2L
4	4Q12	Circuit Breaker	Schneider	IC65N D4A 1P
4	4P12	Power Supply	WEHO	D-120B
4	4Q11	Circuit Breaker	Schneider	C65H-DC C4A 1P
4	4Q13	Circuit Breaker	Schneider	C65H-DC C4A 1P
4	4P14	Power Supply	MW	EDR-120-24 24V
4	4Q14	Circuit Breaker	Schneider	C65H-DC C20A 1P
4	4Q15	Circuit Breaker	Schneider	IC65N D4A 1P
5	5P12	Thermometer	QUASON	XY-WT01
5	5E15	Industrial Chiller	TEYU	CW-5200T
5				
6	6Q3	Vacuum Pump Circuit Breaker	Schneider	IC65N D10A 3P
6	6M3	Vacuum Pump Motor	BOWANG	2BV2061 380V
6	6Q6	Spindle Circuit Breaker	Schneider	IC65N D50A 3P
6	6S6	Filter	DOTHINK	DTT1021-40-S6-S47
6	6S9	Frequency Converter	INOVANCE	MD500T18.5GB
6	6M11	Spindle Motor	AITALMAC	13KW
6	6R11	Braking Resistor	- -	4000W 32Ω
7	7P8	CNC POWER	--	12V 4A
7	7E8	CNC Controler	AITEK	ETC-V2
7	7FU2	Fuse	CHE	FS-101 DC24V 5A
7	7E2	Ethernet Switch	TP-LINK	TL-SG1005D
7	7E12	Remote Wireless Receiver	WH	WHB04B-4 USB
7	7E13	USB KEY	AITEK	
8	8E1	Computer Power on/off	AITALMAC	--
8	8E6	USB-WIFI	UGREEN	AC650M
8	8S8	Filter	Canny Well	CW1B-6A-L
8	8SD8	WINDOWS PC	AITALMAC	PC-KT38
8	8E13	USB-Mouse	Lenovo	M300
8	8E14	USB-Keyboard	Logitech	K310
8	8E16	Monitor	Anmite	AN-195W01D
8	8P18	Power Supply	MW	EDR-75-12
8	8FU18	Fuse	CHE	FS-101 DC24V 5A
8				
8				
8				

Pg.	Code	Name	Mfrs.	Model
9	X 9Q1	Circuit Breaker	Schneider	IC65N D20A 2P
9	Y1 9Q3	Circuit Breaker	Schneider	IC65N D20A 2P
9	Y2 9Q4	Circuit Breaker	Schneider	IC65N D20A 2P
9	Z 9Q6	Circuit Breaker	Schneider	IC65N D20A 2P
9	B 9Q7	Circuit Breaker	Schneider	IC65N D20A 2P
9				
10	10M2	X Motor	Leadshine	ACM13015M2F-70-L 1.5KW 2500r/min
10	X 10L4	X Servo Drive	Leadshine	L7EC-1500S
10	10M8	Y1 Motor	Leadshine	ACM13015M2F-70-L 1.5KW 2500r/min
10	Y1 10L10	Y1 Servo Drive	Leadshine	L7EC-1500S
10	10M15	Y2 Motor	Leadshine	ACM13015M2F-70-L 1.5KW 2500r/min
10	Y2 10L17	Y2 Servo Drive	Leadshine	L7EC-1500S
11	11M4	Z Motor	Leadshine	ACM13013H2E-40-L 1.3KW 1500r/min
11	Z 11L6	Z Servo Drive	Leadshine	L7EC-1500S
11	11KA10	Terminal Relay	OMRON	G2R-2-SND(S) DC24V+P2RF-08-E
11	11M12	B Motor	Leadshine	ACM13013H2F-40-L 1.3KW 1500r/min
11	B 11L14	B Servo Drive	Leadshine	L7EC-1500S
11				
12				
12				
12				
12				
12				
12				
12				
13				
13				
14	14SB3	Enable Key Switch	RENY	RBSNK-2
14	14SB3.1	Power On Button	RENY	R2PIF-1D-2GL
14	14KM3	Contactor	Schneider	LC1D65B7C AC24V
14	14SB9	Vacuum Switch	RENY	RBSNK-2
14	14KM9	Contactor	Schneider	LC1D18B7C AC24V
14	14FU11	Fuse	CHE	FS-101 DC24V 2A
14	14E11	Z Brake	Leadshine	--
14	14FU13	Fuse	CHE	FS-101 DC24V 2A
14	14SQ14	Vacuum Pressure Switch	YXC	ZXC-100, -0.1-0MPA
14	14KA14	Terminal Relay	OMRON	G2R-2-SND(S) DC24V+P2RF-08-E
14	14KA15	Terminal Relay	OMRON	G2R-2-SND(S) DC24V+P2RF-08-E
14	14FU16	Fuse	CHE	FS-101 DC24V 2A
14	14E16	Box FAN	--	24V 6W 12CM
14	14FU17	Fuse	CHE	FS-101 DC24V 2A
14	14E17	Control Box FAN	--	24V 6W 12CM
14	14FU18	Fuse	CHE	FS-101 DC24V 2A

0	1	2	3	4	5	6	7	8	9	10	11	12	13

Pg.	Code	Name	Mfrs.	Model
15	15D0	ETHERCAT I/O	AITEK	IN MODULE
15	15QS1	Air Pressure Switch	SQW	QPM11-NC
15	15QS2	Water Pressure Switch	SN	DN8 1.1-1.8kgf/m² (ON-OFF)
15	15SB7	Emergency Button	RENY	R2PNR4-1B-R
15				
15				
15				
16	16SQ1	X Limit Sensor	IBEST	IPSI-12NO2B-L60mm(NPN NO 2mm 200mA)
16	16SQ2	Y1 Limit Sensor	IBEST	IPSI-12NO2B-L60mm(NPN NO 2mm 200mA)
16	16SQ3	Y2 Limit Sensor	IBEST	IPSI-12NO2B-L60mm(NPN NO 2mm 200mA)
16	16SQ4	Z Limit Sensor	IBEST	IPSI-12NO2B-L60mm(NPN NO 2mm 200mA)
16	16SQ5	B Limit Sensor	IBEST	IPSI-12NO2B-L60mm(NPN NO 2mm 200mA)
16	16SQ9	Spindle make zero magnetic sensor	XINDE	CS1-J 2M
16	16SB10	Tool Change Button	RENY	RAPNF-1A-G
16	16SB14	Control Box-Auto Button	RENY	RAPNF-1A-G
16	16SB15	Control Box-Pause Button	RENY	RAPNF-1A-Y
16	16SB16	Control Box-Stop Button	RENY	RAPNF-1A-R
17	17SB1	Spindle Clamp Button	RENY	RAPNF-1A-G
17	17SB2	Check Tool Switch	RENY	RBSNK-2
17	17SB3	X/Y Axis-Joystick Controller	Schneider	XD2-PA24CR φ22mm
17	17SB7	Z Axis-Joystick Controller	Schneider	XD2-PA22CR φ22mm
17	17P9	Speed Control Wheel	AITEK	24VPLC
18	18EV1	Solenoid Valve	CNSY	4V210-08 G1/4 DC24V
18	18EV2	Solenoid Valve	CNSY	4V210-08 G1/4 DC24V
18	18EV3	Solenoid Valve	CNSY	4V210-08 G1/4 DC24V
18	18EV4	Solenoid Valve	CNSY	4V210-08 G1/4 DC24V
18	18EV5	Solenoid Valve	CNSY	4V210-08 G1/4 DC24V
18	18EV6	Solenoid Valve	CNSY	4V210-08 G1/4 DC24V
18	18KA7	Terminal Relay	OMRON	G2R-2-SND(S) DC24V+P2RF-08-E
18	18H9	Alarm Indicator lamp	TAYB	TB50-4T-D 24V
18	18KA16	Terminal Relay	OMRON	G2R-2-SND(S) DC24V+P2RF-08-E
19	19E1	Left Door Safety	SARY	XG-6673 24V
19	19E3	Right Door Safety	SARY	XG-6673 24V
19	19FU17	Fuse	CHE	FS-101 DC24V 2A
19	19SB17	Laser Switch	RENY	RBSNK-2
19	19SER	LASER	--	16mm